Kinco

HMI

Touch Screen

# Kinco HMI Catalog

- GREEN Series Second-generation
- FUTURE Series Second-generation

**Importa y distribuye en Argentina:**

ECFA



# About us




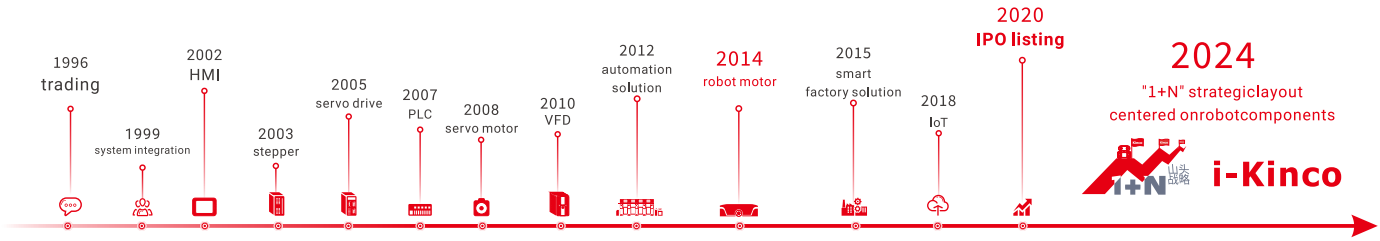


Kinco was founded in 1996, and successfully listed on the Shanghai Stock Exchange in 2020 (abbreviated name: Kinco share, stock code 688160), which is a high-tech, specialized and sophisticated enterprise that attaches great importance to independent research and development and innovation, mainly engaged in the research and development, production, sales and related technical services of industrial automation and robot core components and digital factory hardware and software. It is a leading supplier of automation control, robot power and digital factory solutions in China.

After years of continuous research and development and innovation, Kinco has established a complete product line with independent intellectual property rights, covering a series of products from machine iot to human-machine interaction, control, drive and execution, which are widely used in robots, medical equipment, logistics equipment, packaging equipment, food equipment, clothing equipment, environmental protection equipment, etc. New energy equipment, rail transit equipment and other automation equipment industry.

Based on the comprehensive industrial automation and digital technology platform, the company has in-depth application scenarios in the robot industry, providing display, control, drive and other multi-dimensional solutions for industrial mobile robots, collaborative robots, industrial robots, pan-service robots, and bionic robots. Through the insight of the industry pain points, deep links with robot customers, combined with the advantages of product research and development, the company continues to innovate, and launches industry-leading low-voltage servo products for mobile robots, integrated servo wheel, frameless torque motor for collaborative robots, robot human-machine interfaces, robot controllers and other products. The company has formed a relatively complete robot core parts capability, and after nearly 10 years of hard work in the robot industry, it has become a leading enterprise in the field of mobile robot low-voltage servo, and has a high brand influence in the industry.

Kinco has four research and development centers in Shanghai, Shenzhen, Changzhou and Chengdu, and two manufacturing bases in Shenzhen and Changzhou, a total of 10+ domestic marketing centers, 100+ domestic service providers, 40+ global partners, and products are exported to 70+ countries overseas. In terms of after-sales service, Kinco has established after-sales service centers in Shanghai, Shenzhen and Changzhou.

**Four R&D centers and two manufacturing bases**


Shanghai


Shenzhen


Changzhou


Chengdu


Shenzhen Manufacturing Center
HMI, PLC, drive class


Changzhou Manufacturing Base
electric machinery



ECFA SRL - Av. San Juan 4063 (1233) - Buenos Aires - Argentina - Tel: +54 11 4923-6566 - email: ventas@ecfa.com.ar - www.ecfa.com.ar

CONTENTS

# CONTENTS


## GREEN Series Second-generation Description

06 Series Description

## GREEN Series Second-generation

### General Type

07 GL2043HE

08 GL2070HE/GL2070HE-WIFI/GL2070HE-4G

09 GL2100E/GL2100E-WIFI/GL2100E-4G

10 GL2101E/GL2101E-WIFI/GL2101E-4G

### Standard Type

11 G2070HE/G2070HE-WIFI/G2070HE-4G

12 G2100E/G2100E-WIFI/G2100E-4G

13 G2101E/G2101E-4G

14 G2121E2/G2121E2-4G

15 G2150E2

16 G2156E/G2156E-WIFI

17 G2156E2

## FUTURE Series Second-generation Description

18 Series Description

## FUTURE Series Second-generation

19 F2070E2/F2070E2(UL)

20 F2100E2/F2100E2(UL)

21 F2121E2/F2121E2 (UL)

22 F2150E2

23 F2156E2/F2156E2 (UL)

24 F2156E2-PX/F2156E2-PX(UL)

25 F2156E-TX

## Desktop high-frequency reader-writer

## Features of Kinco DToolsPro




ECFA SRL - Av. San Juan 4063 (1233) - Buenos Aires - Argentina - Tel: +54 11 4923-6566 - email: ventas@ecfa.com.ar - www.ecfa.com.ar

## Specializing in industrial human-machine interfaces for 23 years

## Consistently delivering high-quality products

As a pioneer in domestic HMI technology, Kinco has been deeply involved in customer sites for many years, gaining insights into customer needs. Building on the upgrades of its original GREEN and FUTURE series, Kinco has launched the GL2, G2, and F2 series of industrial HMI, targeting different niche customer segments。



## Six major highlights of Kinco

**Pioneer**
Chinese brand

**Industrial control leading stock**
List on the STAR Market

**23 years**
Technical precipitation

**Complete product categories**
Full set of industrial control solutions

**Certificate qualifications**
CE and UL certifications

**Global services**
Sold far in domestic and overseas markets



ECFA SRL - Av. San Juan 4063 (1233) - Buenos Aires - Argentina - Tel: +54 11 4923-6566 - email: ventas@ecfa.com.ar - www.ecfa.com.ar

## EdgeAccess2 Remote operation and maintenance platform

### —— Remote operation and maintenance software specifically designed for the era of industrial Internet

Compatible with Kinco's new - generation configuration software Kinco DToolsPro
Leading network passthrough technology, stable and efficient remote capabilities, and a brand - new UI operation experience
Provide reliable and convenient remote operation and maintenance services for OEM equipment manufacturers

Product Features：

VNC remote desktop for real - time monitoring of equipment operation status；
Remote independent desktop: Remote operation runs independently of on - site operation；
Remote upload and download of HMI programs, with batch download supported；
Remote passthrough, supporting multiple common PLC protocols for online debugging of PLC programs；
Parameter monitoring: View real - time changes of background parameters；
File management: remotely upload and download files such as recipe files, data reports, PDFs, and pictures；
Log management: User operation information is available for traceability and auditing.

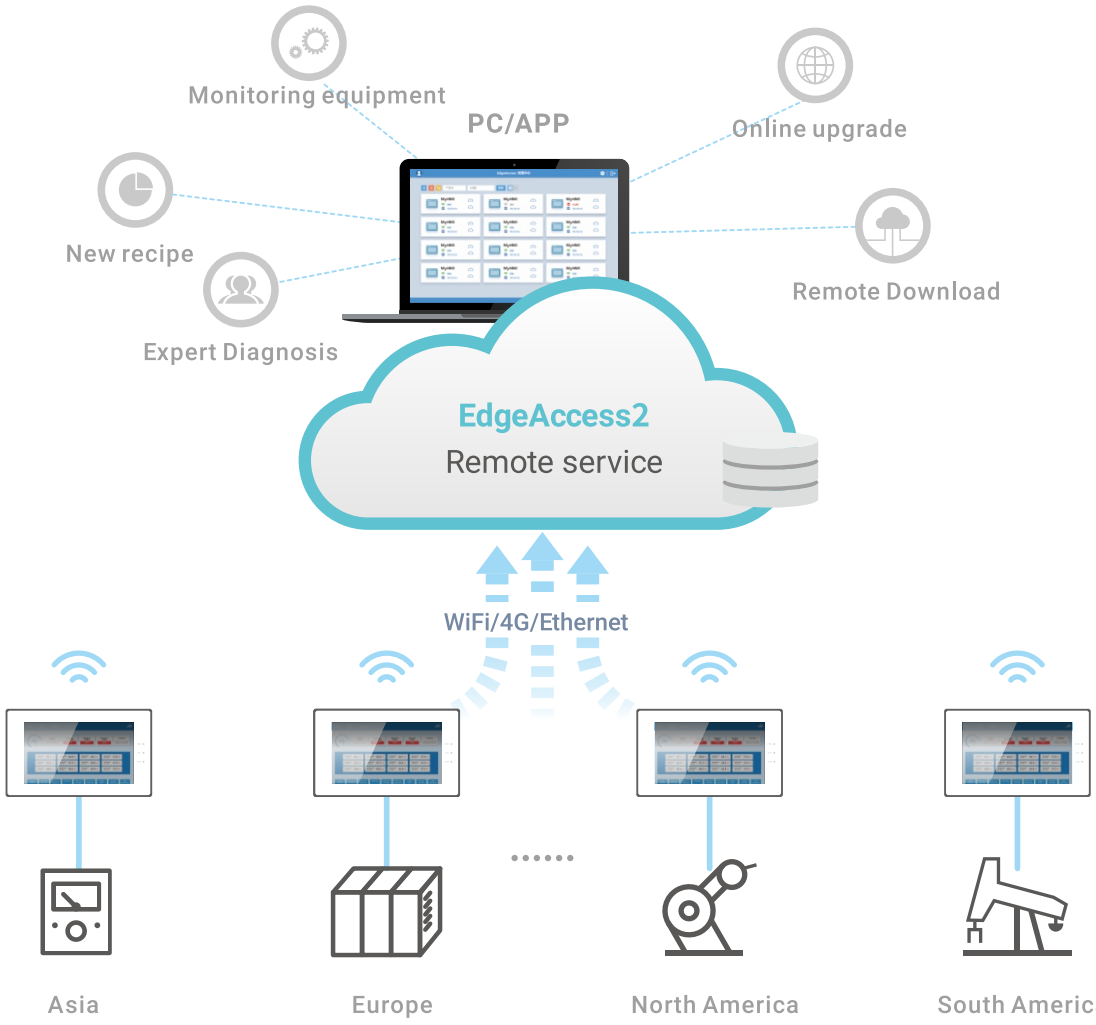

## Conveniently connect with Kinco Machine Internet of Things (M-IoT) platform

### —— Help you embark on a new era of industrial connectivity

The HMI cloud - based solution helps establish connections for devices, enabling efficient and convenient information interaction among devices and the cloud, between devices, and between devices and people

- View the operating status in real time
- Receive fault alarms in real time
- Industrial cloud adoption, Seamlessly integrate with various IoT platforms
- O&M Dashboard, rich components,It enables rapid construction of dashboards

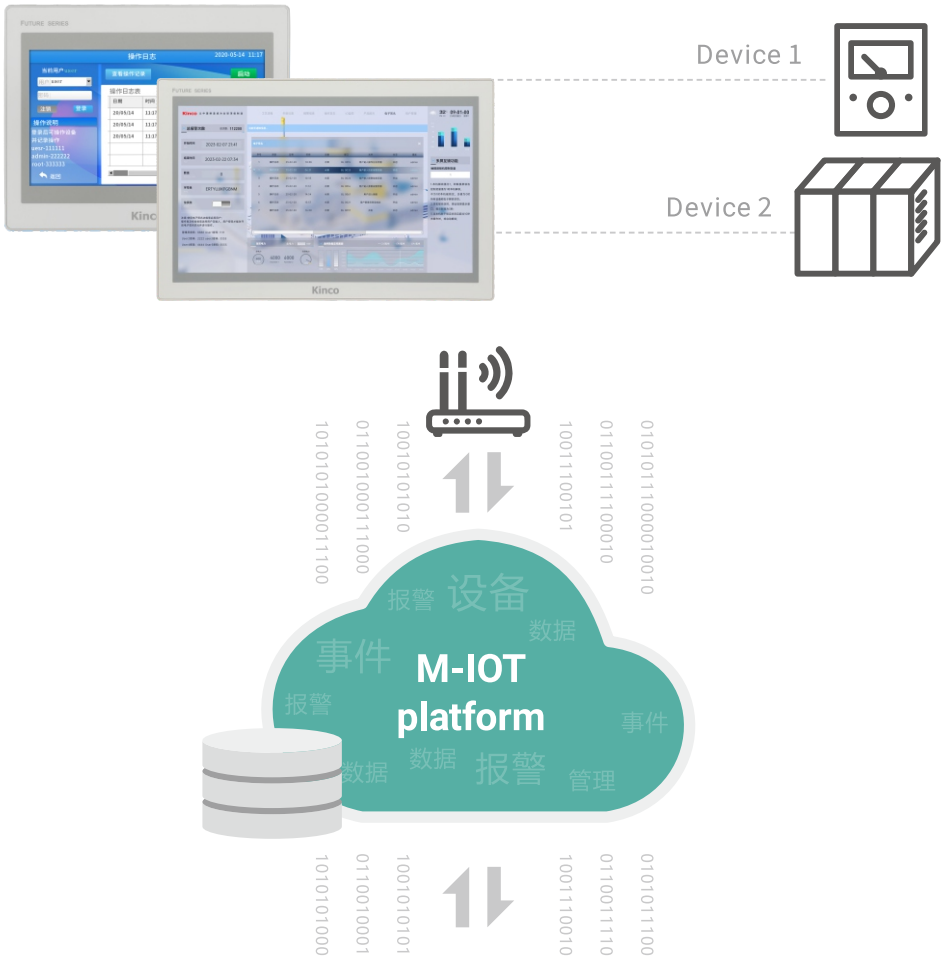





PC APP

* All models with network ports support this function.

# GREEN Series Second-generation

GREEN Series Second-generation with the new generation of free configuration software：Kinco DtoolsPro



The GREEN Series Second-generation Human-Machine Interface (HMI) is a high-performance, efficient development, and cost-effective HMI solution provided by Kinco for smart manufacturing equipment manufacturers! It offers General (GL2 series) and Standard (G2 series) models for customers to choose from based on their specific scenarios.

## General Type GL2 series

### A convenient, efficient and intelligent new choice for HMI!

- Dual-core A7 1GHz CPU
- 4GB flash memory + 256MB memory
- Standard withhigh-definition, high-brightness, and full-view angle LCD
- Remote Internet of Things Optional 4G/WIFI

## Standard Type G2 series

### For manufacturers of intelligent manufacturing equipment, we provide high-performance, efficient development and cost-effective HMI solutions!

- 1.5GHz CPU
- 4GB flash memory + 512MB memory
- Standard withhigh-definition, high-brightness, and full-view angle LCD
- Remote Internet of Things Optional WIFI



ECFA SRL - Av. San Juan 4063 (1233) - Buenos Aires - Argentina - Tel: +54 11 4923-6566 - email: ventas@ecfa.com.ar - www.ecfa.com.ar

## General Type

# GL2043HE




- 4.3-inch 800*480 high definition display with 16.77 million true colors
- 80/80/80/80 wide viewing angle display
- Dual-core CPU with 256MB memory and 4GB flash storage
- Standard with a network port and dual serial ports,offering rich interfaces
- Based on the latest KincoDTools Pro configuration software& EdgeAccess2 remote
- operation&maintenance platform

| Model specification | GL2043HE |
|---|---|
| Performance specifications | |
| Display size | 4.3″ TFT |
| Display area | 95.04mm(H)x54.71mm(V) |
| Resolution | 800*480 pixel |
| Display color | 16.77 million true colors |
| Display viewing angle | 80/80/80/80 (left/right/up/down) |
| Contrast ratio | 1200:1 |
| Backlight | LED |
| Brightness | 350cd/$m^2$ |
| Backlight life | 30000 hours |
| Touch Panel | 4 line precision resistance network (surface hardness 4H) |
| CPU | ARM Cortex-A7 dual core 1GHz |
| Memory | 4GB eMMC+256MB RAM |
| RTC | Built-in |
| Extensible memory | None |
| Print port | Serial port |
| Ethernet | Lan0:10/100 Mbps |
| Program download | USB Slave (Type-C)/Ethernet port |
| Network access | Ethernet |
| VPN | Support HMI remote upload, download and screen monitoring, support PLC transparent transmission program upload, download and monitoring |
| Communication port | COM0:RS232/RS485/RS422; COM2:RS232 |
| Electrical specifications | |
| Input power supply | DC10V ～DC28V |
| Rated power | 2W@DC 24V |
| Allowable loss of power | <3ms |
| Insulation resistance | Over 50MΩ@500V DC |
| Pressure resistance test | 500V AC 1minute |
| Structure specifications | |
| PCB | None |
| Shell material | Engineering plastic |
| Overall dimension (mm) | 132mm*102mm*33mm |
| Cut-out dimension (mm) | 119mm*93mm |
| Weight(kg) | 0.21kg |
| Environmental specification | |
| Working temperature | 0 ～50°C |
| Working humidity | 10～90%RH (Non-condensing) |
| Storage temperature | -20～60°C |
| Storage humidity | 10～90%RH (Non-condensing) |
| Sine vibration test | 10 ～500Hz,30m/$s^2$, X,Y,Z direction/hour |
| Cooling mode | Natural air cooling |
| Product certification | |
| Panel protection grade | Conforming to IP65 requirements |
| CE certificate | EN61000-6-4:2007+A1:2011, EN61000-6-2:2019 |
| Software | |
| Configuration software | Kinco DTools Pro |

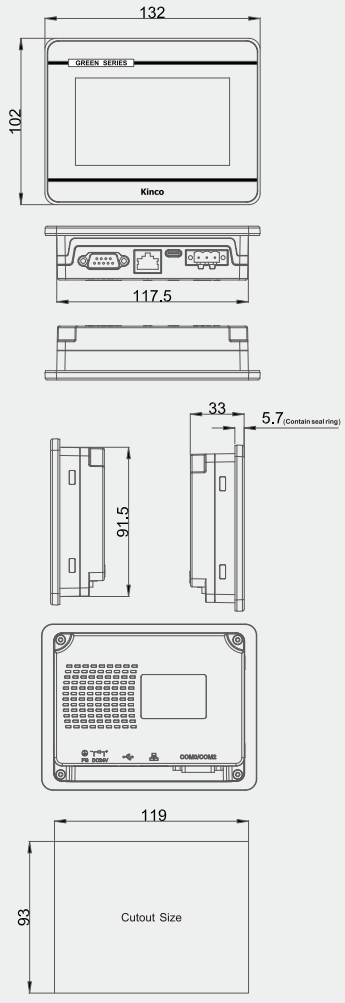




ECFA SRL - Av. San Juan 4063 (1233) - Buenos Aires - Argentina - Tel: +54 11 4923-6566 - email: ventas@ecfa.com.ar - www.ecfa.com.ar

## General Type

# GL2070HE/GL2070HE-WIFI/GL2070HE-4G




- 7-inch 1024*600 high-definition display with 16.77 million true colors
- 85/85/85/85 wide viewing angle display
- Dual-core CPU with 256MB memory and 4GB flash storage
- Single Ethernet port plus three serial ports,supporting dual RS485 applications
- Multiple networking options, Ethernet/Wi-Fi/4G to choose from freely
- Based on the latest EdgeAccess 2.0 version, enjoy seamless IoT connectivity
- Based on the latest Kinco Dtools Pro configuration software

| Model specification | GL2070HE | GL2070HE-WIFI | GL2070HE-4G |
|---|---|---|---|
| **Performance specifications** | | | |
| Display size | 7″ TFT | | |
| Display area | 154.21(H)×85.92(V) | | |
| Resolution | 1024*600 pixel | | |
| Display color | 16.77 million true colors | | |
| Display viewing angle | 85/85/85/85 (left/right/up/down) | | |
| Contrast ratio | 800:1 | | |
| Backlight | LED | | |
| Brightness | 450cd/$m^2$ | | |
| Backlight life | 30000 hours | | |
| Touch Panel | 4 line precision resistance network (surface hardness 4H) | | |
| CPU | ARMCort ex-A7DualCore 1GHz | | |
| Memory | 4GB eMMC+256MB RAM | | |
| RTC | Built-in | | |
| Extensible memory | 1 USB Host,1 USB Slave(Type-C) | | |
| Print port | USB Host/serial port | | |
| Ethernet | 10/100 Mbps | | |
| Program download | USB Slave (Type-C)/U disk/Ethernet port | | |
| Network access | Ethernet | Ethernet/WiFi | Ethernet/4G |
| Wi-Fi/wireless network band | None | IEE802.11 b/g/n | LTE-FDD Band 1/3/5/8, LTE-TDD Band 34/38/39/40/41 |
| VPN | Support HMI remote upload, download and screen monitoring, support PLC transparent transmission program upload, download and monitoring | | |
| Communication port | COM0:RS232/RS485/RS422; COM1:RS485;COM2:RS232 | | |
| **Electrical specifications** | | | |
| Input power supply | DC10.8V ～DC28V | | |
| Rated power | 4.2W@DC 24V | | |
| Allowable loss of power | <3ms | | |
| Insulation resistance | Over 50MΩ@500V DC | | |
| Pressure resistance test | 500V AC 1minute | | |
| **Structure specifications** | | | |
| PCB | None | | |
| Shell material | Engineering plastic | | |
| Overall dimension (mm) | 204mm*150mm*37mm | | |
| Cut-out dimension (mm) | 192mm*138mm | | |
| Weight(kg) | 0.5kg | | |
| **Environmental specification** | | | |
| Working temperature | 0 ～50°C | | |
| Working humidity | 10～90%RH (Non-condensing) | | |
| Storage temperature | -20～60°C | | |
| Storage humidity | 10～90%RH (Non-condensing) | | |
| Sine vibration test | 10 ～500Hz,30m/$s^2$, X,Y,Z direction/hour | | |
| Cooling mode | Natural air cooling | | |
| **Product certification** | | | |
| Panel protection grade | Conforming to IP65 requirements | | |
| CE certificate | EN61000-6-4:2007+A1:2011, EN61000-6-2:2005 | | |
| **Software** | | | |
| Configuration software | Kinco DToolsPro V1.7.5 or above | | |

Mechanical Dimensions (Unit: mm)

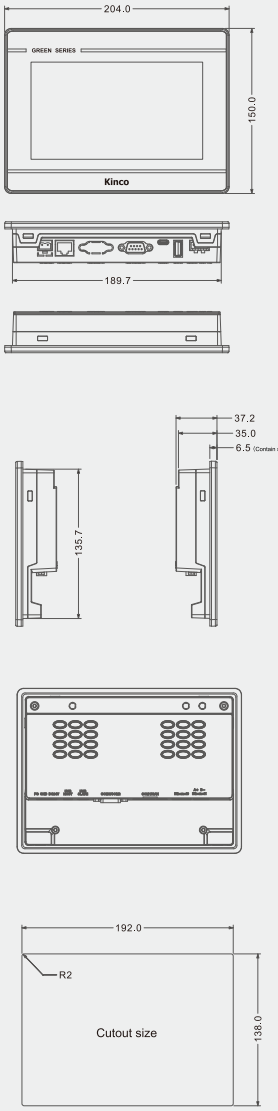

## General Type

# GL2100E/GL2100E-WIFI/GL21OOE-4G




- 10.1-inch 1024*600 high-definition display with 16.2 million true colors
- 85/85/85/85 wide viewing angle display
- Dual-core CPU with 256MB memory and 4GB flash storage
- Single Ethernet port plus three serial ports,supporting dual RS485 applications
- Rear cable exit design,worry-free cable plugging and unplugging
- Multiple networking options,Ethernet/Wi-Fi/4G to choose from freely
- Based on the latest EdgeAccess 2.0 version ,enjoy seamless IoT connectivity
- Based on the latest Kinco Dtools Pro configuration software

| Model specification | GL2100E | GL2100E-WIFI | GL2100E-4G |
|---|---|---|---|
| Performance specifications | | | |
| Display size | 10.1″ TFT | | |
| Display area | 222.72(H)×125.28(V) | | |
| Resolution | 1024*600 pixel | | |
| Display color | 16.2 million true colors | | |
| Display viewing angle | 85/85/85/85 (left/right/up/down) | | |
| Contrast ratio | 500∶1 | | |
| Backlight | LED | | |
| Brightness | 300cd/$m^2$ | | |
| Backlight life | 30000 hours | | |
| Touch Panel | 4 line precision resistance network (surface hardness 4H) | | |
| CPU | ARMCort ex-A7DualCore 1GHz | | |
| Memory | 4GB eMMC+256MB RAM | | |
| RTC | Built-in | | |
| Extensible memory | 1 USB Host,1 USB Slave(Type-C) | | |
| Print port | USB Host/serial port | | |
| Ethernet | 10/100 Mbps | | |
| Program download | USB Slave (Type-C)/U disk/Ethernet port | | |
| Network access | Ethernet | Ethernet/WiFi | Ethernet/4G |
| Wi-Fi/wireless network band | None | IEE802.11 b/g/n | LTE-FDD Band 1/3/5/8, LTE-TDD Band 34/38/39/40/41 |
| VPN | Support HMI remote upload, download and screen monitoring, support PLC transparent transmission program upload, download and monitoring | | |
| Communication port | COM0:RS232/RS485/RS422; COM1:RS485;COM2:RS232 | | |
| Electrical specifications | | | |
| Input power supply | DC10.8V ～DC28V | | |
| Rated power | 6W@DC 24V | | |
| Allowable loss of power | <3ms | | |
| Insulation resistance | Over 50MΩ@500V DC | | |
| Pressure resistance test | 500V AC 1minute | | |
| Structure specifications | | | |
| PCB | None | | |
| Shell material | Engineering plastic | | |
| Overall dimension (mm) | 271mm*191mm*36mm | | |
| Cut-out dimension (mm) | 260mm*179mm | | |
| Weight(kg) | 0.9kg | | |
| Environmental specification | | | |
| Working temperature | 0 ～50°C | | |
| Working humidity | 10～90%RH (Non-condensing) | | |
| Storage temperature | -20～60°C | | |
| Storage humidity | 10～90%RH (Non-condensing) | | |
| Sine vibration test | 10 ～500Hz,30m/$s^2$, X,Y,Z direction/hour | | |
| Cooling mode | Natural air cooling | | |
| Product certification | | | |
| Panel protection grade | Conforming to IP65 requirements | | |
| CE certificate | EN61000-6-4:2007+A1:2011, EN61000-6-2:2005 | | |
| Software | | | |
| Configuration software | Kinco DToolsPro V1.7.5 or above | | |

Mechanical Dimensions (Unit: mm)

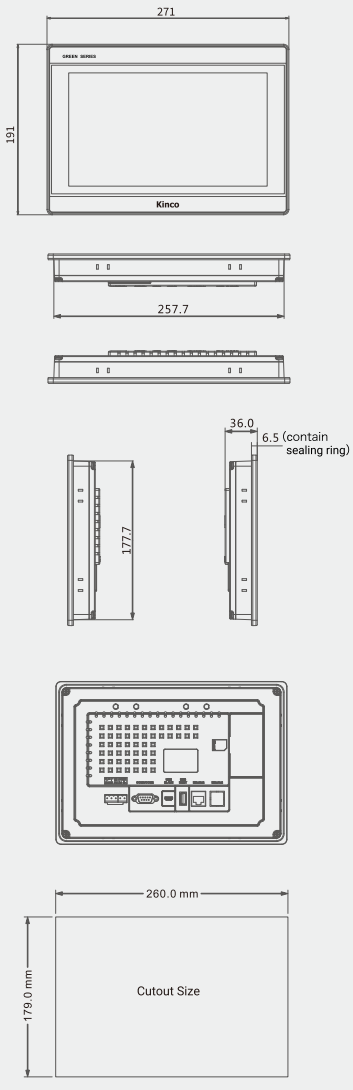




ECFA SRL - Av. San Juan 4063 (1233) - Buenos Aires - Argentina - Tel: +54 11 4923-6566 - email: ventas@ecfa.com.ar - www.ecfa.com.ar

## General Type

# GL2101E/GL2101E-WIFI/GL2101E-4G




- 10.1-inch 1024*600 high-definition display with 16.2 million true colors.
- 85/85/85/85 wide viewing angle display.
- Dual-core CPU with 256MB memory and 4GB flash storage.
- Single Ethernet port plus three serial ports,supporting dual RS485 applications.
- Bottom cable exit design,saving back space.
- Multiple networking options,Ethernet/Wi-Fi/4G to choose from freely.
- Based on the latest EdgeAccess 2.0 version ,enjoy seamless IoT connectivity.
- Based on the latest Kinco DTools Pro configuration software.

| Model specification | GL2101E | GL2101E-WIFI | GL2101E-4G |
|---|---|---|---|
| **Performance specifications** | | | |
| Display size | 10.1″ TFT | | |
| Display area | 222.72(H)×125.28(V) | | |
| Resolution | 1024*600 pixel | | |
| Display color | 16.2 million true colors | | |
| Display viewing angle | 85/85/85/85 (left/right/up/down) | | |
| Contrast ratio | 500∶1 | | |
| Backlight | LED | | |
| Brightness | 300cd/$m^2$ | | |
| Backlight life | 30000 hours | | |
| Touch Panel | 4 line precision resistance network (surface hardness 4H) | | |
| CPU | ARMCort ex-A7DualCore 1GHz | | |
| Memory | 4GB eMMC+256MB RAM | | |
| RTC | Built-in | | |
| Extensible memory | 1 USB Host,1 USB Slave(Type-C) | | |
| Print port | USB Host/serial port | | |
| Ethernet | 10/100 Mbps | | |
| Program download | USB Slave (Type-C)/U disk/Ethernet port | | |
| Network access | Ethernet | Ethernet/WiFi | Ethernet/4G |
| Wi-Fi/wireless network band | None | IEE802.11 b/g/n | LTE-FDD Band 1/3/5/8, LTE-TDD Band 34/38/39/40/41 |
| VPN | Support HMI remote upload, download and screen monitoring, support PLC transparent transmission program upload, download and monitoring | | |
| Communication port | COM0:RS232/RS485/RS422; COM1:RS485;COM2:RS232 | | |
| **Electrical specifications** | | | |
| Input power supply | DC10.8V ～DC28V | | |
| Rated power | 6W@DC 24V | | |
| Allowable loss of power | <3ms | | |
| Insulation resistance | Over 50MΩ@500V DC | | |
| Pressure resistance test | 500V AC 1minute | | |
| **Structure specifications** | | | |
| PCB | None | | |
| Shell material | Engineering plastic | | |
| Overall dimension (mm) | 271mm*213mm*38mm | | |
| Cut-out dimension (mm) | 260mm*202mm | | |
| Weight(kg) | 1.1kg | | |
| **Environmental specification** | | | |
| Working temperature | 0 ～50°C | | |
| Working humidity | 10～90%RH (Non-condensing) | | |
| Storage temperature | -20～60°C | | |
| Storage humidity | 10～90%RH (Non-condensing) | | |
| Sine vibration test | 10 ～500Hz,30m/$s^2$, X,Y,Z direction/hour | | |
| Cooling mode | Natural air cooling | | |
| **Product certification** | | | |
| Panel protection grade | Conforming to IP65 requirements | | |
| CE certificate | EN61000-6-4:2007+A1:2011, EN61000-6-2:2005 | | |
| **Software** | | | |
| Configuration software | Kinco DToolsPro V1.7.5 or above | | |

Mechanical Dimensions (Unit: mm)

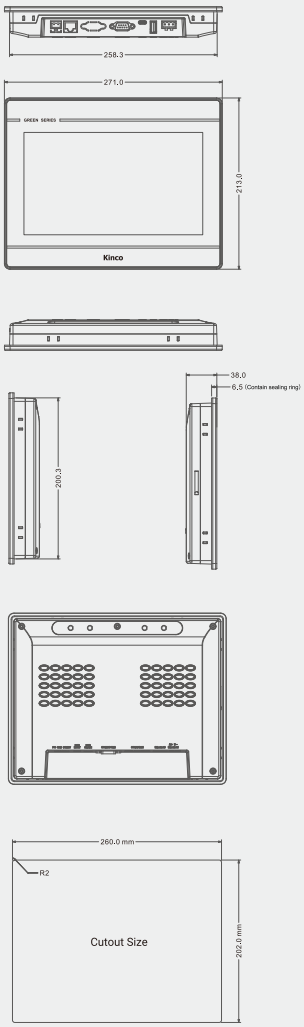

## Standard Type

# G2070HE/G2070HE-WIFI/G2070HE-4G




- 7-inch 1024*600 high-definition display with 16.77 million true colors.
- 85/85/85/85 wide viewing angle display.
- Quad-core CPU with 512MB memory and 4GB flash storage.
- Three serial ports, supporting dual RS485 applications.
- Standard with network port, optional 4G / WIFI connectivity
- Based on the latest Kinco DToolsPro configuration software&EdgeAccess2 remote maintenance platform

| Model/Specification | G2070HE | G2070HE-WIFI | G2070HE-4G |
|---|---|---|---|
| **Performance specifications** | | | |
| Display size | 7"TFT | | |
| Display area | 154.21(H)x85.92(V) | | |
| Resolution | 1024*600 pixel | | |
| Display color | 16.77 million true colors | | |
| Display viewing angle | 85/85/85/85(left/right/up/down) | | |
| Contrast ratio | 800:1 | | |
| Backlight | LED | | |
| Brightness | 450cd/$m^2$ | | |
| Backlight life | 30000 hours | | |
| Touch Panel | 4 line precision resistance network (surface hardness 4H) | | |
| CPU | Quad-core ARM 1.5GHz | | |
| Memory | 4GB eMMC+512MB RAM | | |
| RTC | Built-in | | |
| Extensible memory | 1 USB Host | | |
| Print port | USB Host/serial port | | |
| Ethernet | Lan0:10/100Mbps | | |
| Program download | USB Slave(Type-C)/U disk/Ethernet port | | |
| Network access | Ethernet | Ethernet/WIFI | Ethernet/4G |
| Wi-Fi/wireless network band | None | IEE802.11 b/g/n | LTE-FDD Band 1/3/5/8, LTE-TDD Band 34/38/39/40/41 |
| VPN | Support HMI remote upload, download and screen monitoring,support PLC transparent transmission program upload, download and monitoring | | |
| Communication port | COM0:RS232/RS485/RS422:C0M1:RS485/RS422:C0M2:RS232 | | |
| **Electrical specifications** | | | |
| Input power supply | DC18V~DC28V | | |
| Rated power | 7W@DC 24V | | |
| Allowable loss of power | <3ms | | |
| Insulation resistance | Over 50MΩ@500V DC | | |
| Pressure resistance test | 500V AC 1minute | | |
| **Structure specifications** | | | |
| PCB | None | | |
| Shell material | Engineering plastic | | |
| Overall dimension (mm) | 204mm*150mm*37mm | | |
| Cut-out dimension (mm) | 192mm*138mm | | |
| Weight(kg) | 0.5Kg | | |
| **Environmental specification** | | | |
| Working temperature | 0~50°C | | |
| Working humidity | 10~90%RH(Non-condensing) | | |
| Storage temperature | -20~60°C | | |
| Storage humidity | 10~90%RH(Non-condensing) | | |
| Sine vibration test | 10~500Hz,30m/$s^2$,X,Y,Z direction/hour | | |
| Cooling mode | Natural air cooling | | |
| **Product certification** | | | |
| Panel protection grade | Conforming to IP65 requirements | | |
| CE certificate | EN61000-6-4:2007+A1:2011,EN61000-6-2:2005) | | |
| **Software** | | | |
| Configuration software | Kinco Dtools Pro | | |

**Mechanical Dimensions (Unit: mm)**

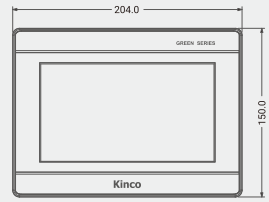


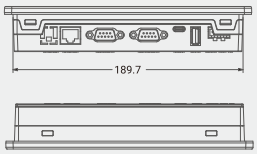


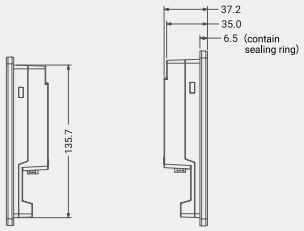


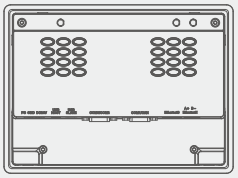

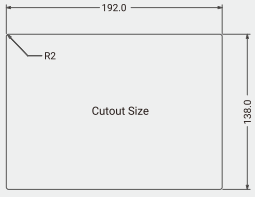

## Standard Type

# G2100E/G2100E-WIFI/G2100E-4G



- 10.1-inch 1024*600 high-definition display with 16.77 million true colors.
- 85/85/85/85 wide viewing angle display.
- Quad-core CPU with 512MB memory and 4GB flash storage.
- Three serial ports, supporting dual RS485 applications.
- Standard with network port, optional 4G / WIFI connectivity
- Rear cable exit design, cable plug and unplug without interference.
- Based on the latest Kinco DToolsPro configuration software&EdgeAccess2 remote maintenance platform

| Model/Specification | G2100E | G2100E-WIFI | G2100E-4G |
|---|---|---|---|
| **Performance specifications** | | | |
| Display size | 10.1"TFT | | |
| Display area | 222.72(H)x125.28(V) | | |
| Resolution | 1024*600 pixel | | |
| Display color | 16.77 million true colors | | |
| Display viewing angle | 85/85/85/85(left/right/up/down) | | |
| Contrast ratio | 500:1 | | |
| Backlight | LED | | |
| Brightness | 300cd/m$^2$ | | |
| Backlight life | 30000 hours | | |
| Touch Panel | 4 line precision resistance network (surface hardness 4H) | | |
| CPU | Quad-core ARM 1.5GHz | | |
| Memory | 4GB eMMC+512MB RAM | | |
| RTC | Built-in | | |
| Extensible memory | 1 USB Host | | |
| Print port | USB Host/serial port | | |
| Ethernet | Lan0:10/100Mbps | | |
| Program download | USB Slave(Type-C)/U disk/Ethernet port | | |
| Network access | Ethernet | Ethernet/WiFi | Ethernet/4G |
| Wi-Fi/wireless network band | None | IEE802.11 b/g/n | LTE-FDD Band 1/3/5/8,<br>LTE-TDD Band 34/38/39/40/41 |
| VPN | Support HMI remote upload, download and screen monitoring,support PLC transparent transmission program upload, download and monitoring | | |
| Communication port | COM0:RS232/RS485/RS422;COM1:RS485;COM2:RS232 | | |
| **Electrical specifications** | | | |
| Input power supply | DC18V~DC28V | | |
| Rated power | 7W@DC 24V | | |
| Allowable loss of power | <3ms | | |
| Insulation resistance | Over 50MΩ@500V DC | | |
| Pressure resistance test | 500V AC 1minute | | |
| **Structure specifications** | | | |
| PCB | None | | |
| Shell material | Engineering plastic | | |
| Overall dimension (mm) | 271mm*191mm*36mm | | |
| Cut-out dimension (mm) | 260mm*179mm | | |
| Weight(kg) | 0.9Kg | | |
| **Environmental specification** | | | |
| Working temperature | 0~50°C | | |
| Working humidity | 10~90%RH(Non-condensing) | | |
| Storage temperature | -20~60°C | | |
| Storage humidity | 10~90%RH(Non-condensing) | | |
| Sine vibration test | 10~500Hz,30m/s$^2$,X,Y,Z direction/hour | | |
| Cooling mode | Natural air cooling | | |
| **Product certification** | | | |
| Panel protection grade | Conforming to IP65 requirements | | |
| CE certificate | EN61000-6-4:2007+A1:2011,EN61000-6-2:2005) | | |
| **Software** | | | |
| Configuration software | Kinco Dtools Pro | | |

**Mechanical Dimensions (Unit: mm)**

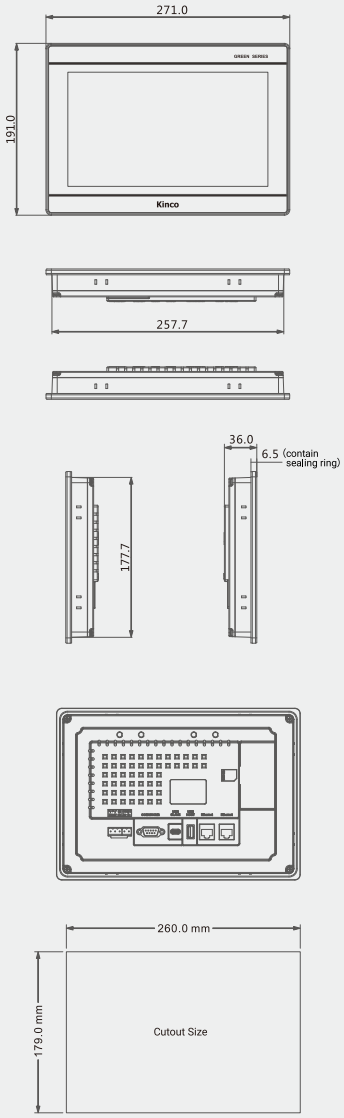

## Standard Type

# G2101E/G2101E-4G




- 10.1-inch 1024*600 high-definition display with 16.77 million true colors.
- Quad-core CPU with 512MB memory and 4GB flash storage.
- Three serial ports, supporting dual RS485 applications.
- Standard with network port, optional 4G connectivity
- Bottom cable exit design, saving space on the back
- Based on the latest Kinco DToolsPro configuration software&EdgeAccess2 remote maintenance platform

| Model/Specification | G2101E | G2101E-4G |
|---|---|---|
| **Performance specifications** | | |
| Display size | 10.1″ TFT | |
| Display area | 222.72(H)×125.28(V) | |
| Resolution | 1024*600 pixel | |
| Display color | 16.77 million true colors | |
| Display viewing angle | 70/70/60/60 (left/right/up/down) | |
| Contrast ratio | 500:1 | |
| Backlight | LED | |
| Brightness | 350cd/$m^2$ | |
| Backlight life | 30000 hours | |
| Touch Panel | 4 line precision resistance network (surface hardness 4H) | |
| CPU | Quad-core ARM 1.5GHz | |
| Memory | 4GB eMMC+512MB RAM | |
| RTC | Built-in | |
| Extensible memory | 1 USB Host | |
| Print port | USB Host/serial port | |
| Ethernet | Lan0:10/100 Mbps | |
| Program download | USB Slave (Type-C)/U disk/Ethernet port | |
| Network access | Ethernet | Ethernet/4G |
| Wi-Fi/wireless network band | None | LTE-FDD Band 1/3/5/8,<br>LTE-TDD Band 34/38/39/40/41 |
| VPN | Support HMI remote upload, download and screen monitoring,<br>support PLC transparent transmission program upload, download and monitoring | |
| Communication port | COM0:RS232/RS485/RS422; COM1:RS485/RS422;COM2:RS232 | |
| **Electrical specifications** | | |
| Input power supply | DC18V ～DC28V | |
| Rated power | 7W@DC 24V | |
| Allowable loss of power | <3ms | |
| Insulation resistance | Over 50MΩ@500V DC | |
| Pressure resistance test | 500V AC 1minute | |
| **Structure specifications** | | |
| PCB | None | |
| Shell material | Engineering plastic | |
| Overall dimension (mm) | 271mm*213mm*38mm | |
| Cut-out dimension (mm) | 260mm*202mm | |
| Weight(kg) | 1.1kg | |
| **Environmental specification** | | |
| Working temperature | 0 ～50℃ | |
| Working humidity | 10～90%RH (Non-condensing) | |
| Storage temperature | -20～60℃ | |
| Storage humidity | 10～90%RH (Non-condensing) | |
| Sine vibration test | 10 ～500Hz,30m/$s^2$, X,Y,Z direction/hour | |
| Cooling mode | Natural air cooling | |
| **Product certification** | | |
| Panel protection grade | Conforming to IP65 requirements | |
| CE certificate | EN61000-6-4：2007+A1:2011, EN61000-6-2：2005 | |
| **Software** | | |
| Configuration software | Kinco DTools Pro | |

Mechanical Dimensions (Unit: mm)

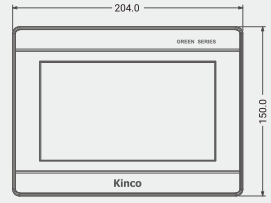


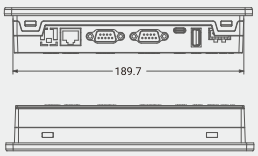


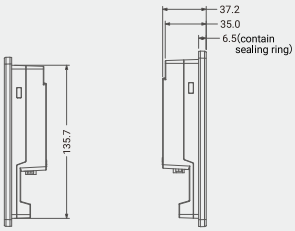


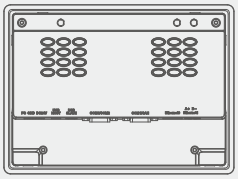

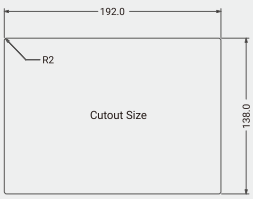

## Standard Type

# G2121E2/G2121E2-4G




- 12.1-inch 1280*800 high-definition display with 16.77 million true colors.
- 85/85/85/85 wide viewing angle display.
- Quad-core CPU with 512MB memory and 4GB flash storage.
- Three serial ports, supporting dual RS485 applications.
- Standard with dual-network port, optional 4G connectivity
- Rear cable exit design, cable plug and unplug without interference.
- Based on the latest Kinco DToolsPro configuration software&EdgeAccess2 remote maintenance platform

| Model/Specification | G2121E2 | G2121E2-4G |
|---|---|---|
| Performance specifications | | |
| Display size | 12.1″ TFT | |
| Display area | 261.12(H)x163.20(V) | |
| Resolution | 1280*800 pixel | |
| Display color | 16.77 million true colors | |
| Display viewing angle | 85/85/85/85 (left/right/up/down) | |
| Contrast ratio | 1200∶1 | |
| Backlight | LED | |
| Brightness | 500cd/$m^2$ | |
| Backlight life | 50000 hours | |
| Touch Panel | 4 line precision resistance network (surface hardness 4H) | |
| CPU | Quad-core ARM 1.5GHz | |
| Memory | 4GB eMMC+512MB RAM | |
| RTC | Built-in | |
| Extensible memory | 1 USB Host | |
| Print port | USB Host/serial port | |
| Ethernet | LAN0:10/100 Mbps；LAN1:10/100 Mbps | |
| Program download | USB Slave (Type-C)/U disk/Ethernet port | |
| Network access | Ethernet | Ethernet/4G |
| Wi-Fi/wireless network band | None | LTE-FDD Band 1/3/5/8,<br>LTE-TDD Band 34/38/39/40/41 |
| VPN | Support HMI remote upload, download and screen monitoring,<br>support PLC transparent transmission program upload, download and monitoring | |
| Communication port | COM0:RS232/RS485/RS422; COM1:RS485/RS422;COM2:RS232 | |
| Electrical specifications | | |
| Input power supply | DC18V ～DC28V | |
| Rated power | 15W@DC 24V | |
| Allowable loss of power | <3ms | |
| Insulation resistance | Over 50MΩ@500V DC | |
| Pressure resistance test | 500V AC 1minute | |
| Structure specifications | | |
| PCB | None | |
| Shell material | Engineering plastic | |
| Overall dimension (mm) | 309x229x43mm | |
| Cut-out dimension (mm) | 299x219mm | |
| Weight(kg) | 1.6kg | |
| Environmental specification | | |
| Working temperature | 0 ～50℃ | |
| Working humidity | 10～90%RH (Non-condensing) | |
| Storage temperature | -20～60℃ | |
| Storage humidity | 10～90%RH (Non-condensing) | |
| Sine vibration test | 10 ～500Hz,30m/$s^2$, X,Y,Z direction/hour | |
| Cooling mode | Natural air cooling | |
| Product certification | | |
| Panel protection grade | Conforming to IP65 requirements | |
| CE certificate | EN61000-6-4：2007+A1:2011, EN61000-6-2：2005 | |
| Software | | |
| Configuration software | Kinco DTools Pro | |

Mechanical Dimensions (Unit: mm)

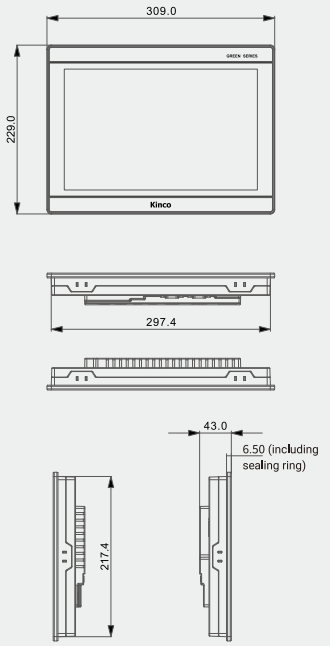


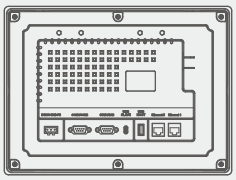

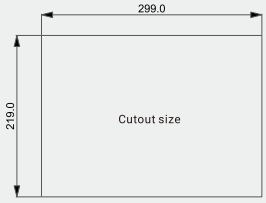

## Standard Type

# G2150E2



- 15-inch 1024*768 display with 16.77 million true colors.
- 88/88/88/88 near-full-view display.
- Quad-core CPU with 512MB memory and 4GB flash storage.
- Designed with dual Ethernet ports and three serial ports, support dual-RS485 applications
- Built-in isolated power supply, good protection
- Based on the latest Kinco DToolsPro configuration software&EdgeAccess2 remote maintenance platform

| Model/Specification | G2150E2 |
|---|---|
| **Performance specifications** | |
| Display size | 15"TFT |
| Display area | 304.1(H)X228.1(V) |
| Resolution | 1,024*768 pixels |
| Display color | 16.77M true color |
| Display angle of view | 88/88/88/88 (left/right/up/down) |
| Contrast ratio | 2500:1 |
| Backlight | LED |
| Brightness | 350cd/$m^2$ |
| Backlight life | 70,000 hours |
| Touch panel | 4-wire precision resistance network |
| Processor | Quad-core ARM 1.5GHz |
| Storage | 4GB eMMC flash memory + 512MB RAM |
| RTC | Built-in RTC + 512KB recipe |
| Expandable storage | 1 USB Host |
| Print port | USB host/serial port |
| Ethernet | LAN0:10/100 Mbps LAN1:10/100 Mbps |
| Program download | Ethernet port/USB Slave/U disk |
| Communication port | COM0:RS232/RS485/RS422;COM1:RS485/RS422;COM2:RS232; |
| **Electrical specifications** | |
| Input power supply | DC18V~DC28V, built-in isolated |
| Power consumption | 15W@DC24V |
| Insulation resistance | Over 50MΩ@500V DC |
| Hi-pot test | 500 VAC 1 minute |
| **Structure specifications** | |
| PCB coating (Yes/No) | None |
| Shell material | Engineering plastic |
| Shape size | 398×298×47(mm) |
| Cutout size | 383×283(mm) |
| Weight | 3kg |
| **Environmental specifications** | |
| Operating ambient temperature | 0~50°C |
| Operating ambient humidity | 10~90% RH (noncondensing) |
| Storage ambient temperature | -20~60°C |
| Storage ambient humidity | 10~90% RH (noncondensing) |
| Shockproof performance | 10~500Hz, 30m/$S^2$, X, Y, Z directions/hour |
| Cooling mode | Natural air cooling |
| **Product certification** | |
| Panel protection grade | Ip65 compliant (4208-93) |
| CE authentication | CE compliant (EN IEC 61000-6-4:2019, EN IEC 61000-6-2:2019) |
| **Software** | |
| Configuration software | Kinco DToolsPro |

Mechanical Dimensions (Unit: mm)

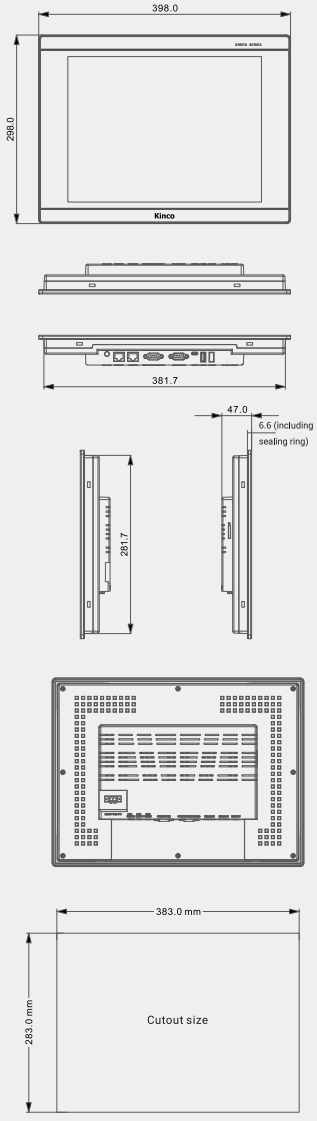




ECFA SRL - Av. San Juan 4063 (1233) - Buenos Aires - Argentina - Tel: +54 11 4923-6566 - email: ventas@ecfa.com.ar - www.ecfa.com.ar

## Standard Type

# G2156E/G2156E-WIFI




- 15.6-inch 1920*1080 display with 16.77 million true colors.
- Quad-core CPU with 512MB memory and 4GB flash storage.
- Designed with Ethernet ports and three serial ports,optional WIFI connectivity
- Metallic shell + three-proofing coating+ power isolation, safe and reliable
- Based on the latest Kinco DToolsPro configuration software&EdgeAccess2 remote maintenance platform

| Model specification | G2156E | G2156E-WIFI |
|---|---|---|
| **Performance specifications** | | |
| Display size | 15.6"TFT | |
| Display area | 334.16(W)×193.59(H) | |
| Resolution | 1920*1080 pixel | |
| Display color | 16.77 million true colors | |
| Display viewing angle | 80/80/80/80(left/right/up/down) | |
| Contrast ratio | 1000:1 | |
| Backlight | LED | |
| Brightness | 250cd/$m^2$ | |
| Backlight life | 20000 hours | |
| Touch Panel | 4 line precision resistance network (surface hardness 4H) | |
| CPU | Quad-core ARM 1.5GHz | |
| Memory | 4GB eMMC+512MB RAM | |
| RTC | Built-in | |
| Extensible memory | 1 USB Host | |
| Print port | USB Host/serial port | |
| Ethernet | 10/100Mbps | |
| Program download | USB Slave(Type-C)/U disk/Ethernet port | |
| Ethernet | Ethernet | Ethernet/WIFI |
| Wi-Fi/wireless network band | None | IEE802.11 b/g/n |
| VPN | Support HMI remote upload, download and screen monitoring,support PLC transparent transmission program upload, download and monitoring | |
| Communication port | COM0:RS232/RS485/RS422;COM2:RS232 | |
| **Electrical specifications** | | |
| Input power supply | DC18V～DC28V | |
| Rated power | 15W@DC 24V | |
| Allowable loss of power | ＜3ms | |
| Insulation resistance | Over 50MΩ@500V DC | |
| Pressure resistance test | 500V AC 1minute | |
| **Structure specifications** | | |
| PCB | None | |
| Shell material | Engineering plastic | |
| Overall dimension (mm) | 395mm*259mm*25.5mm | |
| Cut-out dimension (mm) | 381.5mm*245.5mm | |
| Installation method | Snap-in installation, VESA mount installation(VESA:100*100mm) | |
| Weight(kg) | 2.5Kg | |
| **Environmental specification** | | |
| Working temperature | 0～50°C | |
| Working humidity | 10～90%RH (Non-condensing) | |
| Storage temperature | -20～60°C | |
| Storage humidity | 10～90%RH (Non-condensing) | |
| Sine vibration test | 10 ～500Hz,30m/$s^2$, X,Y,Z direction/hour | |
| Cooling mode | Natural air cooling | |
| **Product certification** | | |
| Panel protection grade | Conforming to IP65 requirements | |
| CE certificate | EN61000-6-4：2007+A1:2011, EN61000-6-2：2005) | |
| **Software** | | |
| Configuration software | Kinco DToolsPro | |

Mechanical Dimensions (Unit: mm)

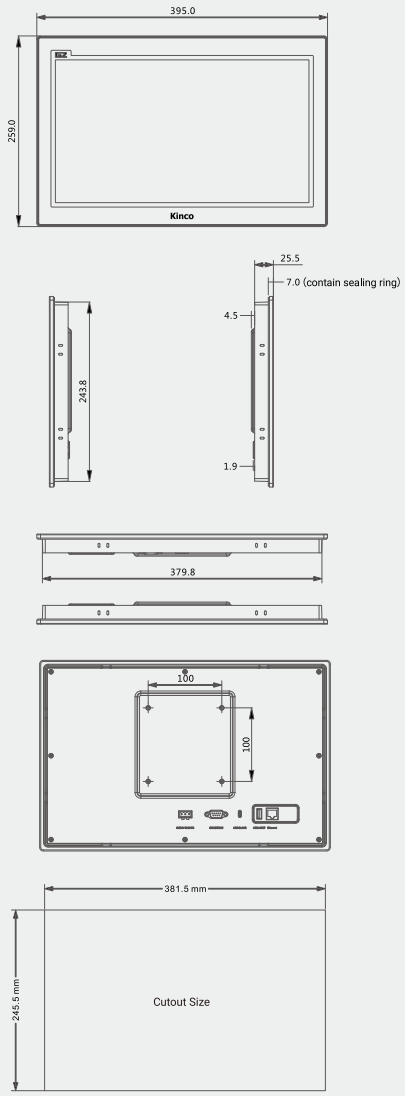

## Standard Type

# G2156E2




- 15.6-inch 1920*1080 display with 16.77 million true colors.
- Quad-core CPU with 512MB memory and 4GB flash storage.
- Designed with Dual Ethernet ports and three serial ports,ensuring reliable communication
- Metallic shell + three-proofing coating+ power isolation, safe and reliable
- Based on the latest Kinco DToolsPro configuration software&EdgeAccess2 remote maintenance platform

| Model/Specification | G2156E2 |
|---|---|
| **Performance specifications** | |
| Display size | 15.6"TFT |
| Display area | 344.16(W)x193.59(H) |
| Resolution | 1,920*1,080 pixels |
| Display color | 16.7M |
| Display angle of view | 80/80/80/80 (left/right/up/down) |
| Contrast ratio | 1000:1 |
| Backlight | LED |
| Brightness | 250cd/m$^2$ |
| Backlight life | > 20,000 hours |
| Touch panel | 4-wire precision resistance network (surface hardness: 3H) |
| Processor | Quad-core ARM 1.5GHz |
| Storage | 4GB flash memory + 512MB memory |
| RTC | Built-in RTC + 512KB recipe |
| Expandable storage | 1USB Host |
| Print port | USB host/serial port |
| Ethernet | LAN0:10/100 Mbps |
| Program download | Ethernet port/USB Slave/U disk |
| Communication port | COM0:RS232/RS485/RS422;COM2:RS232; |
| **Electrical specifications** | |
| Input power supply | DC18V~DC28V, built-in isolated |
| Power consumption | 15W@DC24V |
| Allowable loss of power | <3ms |
| Insulation resistance | Over 50MΩ@500V DC |
| Hi-pot test | 500 VAC 1 minute |
| **Structure specifications** | |
| Shell material | Metallic |
| Shape size | 395x259x25.5mm |
| Cutout size | 381.5x245.5mm |
| Installation | Buckle mounting, and VESA rack mounting (VESA 100*100mm) |
| Weight | 2.5kg |
| **Environmental specifications** | |
| Operating ambient temperature | 0~50°C |
| Operating ambient humidity | 10~90% RH (noncondensing) |
| Storage ambient temperature | -20~60°C |
| Storage ambient humidity | 10~90% RH (noncondensing) |
| Shockproof performance | 10~500Hz, 30m/s$^2$, X, Y, Z directions/hour |
| Cooling mode | Natural air cooling |
| **Product certification** | |
| Panel protection grade | IP65 compliant (4208-93) |
| CE authentication | CE compliant (EN IEC 61000-6-4:2019, EN IEC 61000-6-2:2019) |
| **Software** | |
| Configuration software | Kinco DToolsPro |

Mechanical Dimensions (Unit: mm)

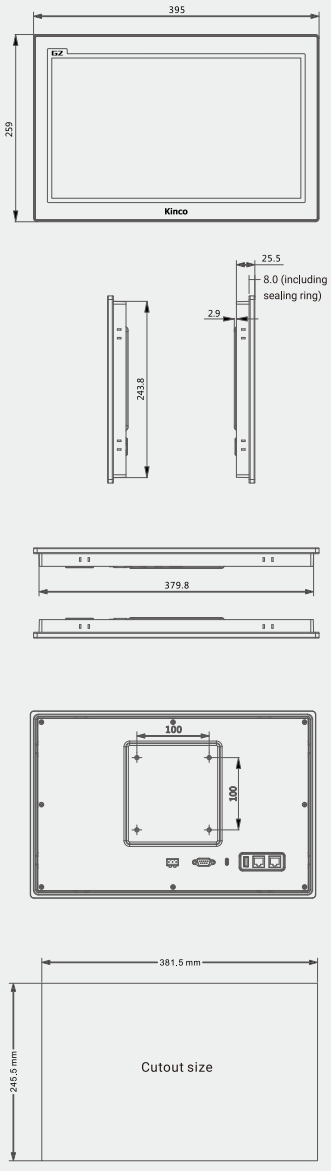




ECFA SRL - Av. San Juan 4063 (1233) - Buenos Aires - Argentina - Tel: +54 11 4923-6566 - email: ventas@ecfa.com.ar - www.ecfa.com.ar

# FUTURE Series Second-generation

## Essential Smart Terminals for High-end Manufacturing

FUTURE Series Second-generation with the new generation of free configuration software：Kinco DtoolsPro

Kinco adheres to the industry philosophy of "Quality First," deeply cultivates the manufacturing industry, gets close to the market demands of users, and based on more than 20 years of independent R&D experience, integrates the latest technologies in the Internet of Things, big data, cloud computing,and edge-end collaboration. In the field of HMI, Kinco has launched a milestone new hardware for the high-end equipment manufacturing industry--FUTURE Series Second-generation

- Quad-core ARM 1.8GHz
- Power supply isolation PCB coating
- With Kinco DToolsPro
- 1GB flash memory + 8GB memory
- CNC Metal shell
- Dual Ethernet & dual Serial port
- Standard with high-definition, high-brightness, and full-view angle LCD
- Complies with CE&UL certifications
- 7、10.1、12.1、15、15.6 inch

## FUTURE Series Second-generation

# F2070E2/F2070E2(UL)




- 7" display, 16.77M true color
- Quad-core CPU, 1G memory + 8G flash memory
- Three-proofing coating for PCB moisture, mildew and corrosion proofing
- Isolated power supply with strong anti-interference capability, safe and reliable
- Designed with dual Ethernet ports and three serial ports, support dual-RS485 applications
- With the latest configuration software Kinco DToolsPro

| Model/Specification | F2070E2 | F2070E2(UL) |
|---|---|---|
| **Performance specifications** | | |
| Display size | 7" TFT | |
| Display area | 154.08 (W) ×85.92 (H) | |
| Resolution | 800*480 pixel | |
| Display color | 16.77 million true color | |
| Display angle of view | 80/80/80/60(left/right/up/down) | |
| Contrast ratio | 800:1 | |
| Backlight | LED | |
| Brightness | 400cd/m$^2$ | |
| Backlight life | 20000 hours | |
| Touch Panel | 4 line precision resistance network (surface hardness 4H) | |
| CPU | Quad-core ARM 1.8GHz | |
| Memory | 8GB flash memory + 1GB memory | |
| RTC | Built-in RTC + 512KB recipe | |
| Extensible memory | 1 USB Host | |
| Print port | USB Host/Serial port | |
| Ethernet | LAN0:10/100/1000Mbps；LAN1:10/100Mbps | |
| Program download | USB slave/U disk/Ethernet | |
| Communication port | COM0:RS232/RS485/RS422; COM1:RS485/RS422;COM2:RS232 | |
| **Electrical specifications** | | |
| Input power supply | DC18V ～DC28V,built-in isolated | |
| Rated power | 7W@DC 24V | |
| Allowable loss of power | <3ms | |
| Insulation resistance | Over 50MΩ@500V DC | |
| Pressure resistance test | 500V AC 1 minute | |
| **Structure specifications** | | |
| PCB coating | Yes | |
| Shell material | Engineering plastic | |
| Shape size | 204×150×37mm | |
| Cut-out size | 192×138mm | |
| Weight | 0.6kg | |
| **Environmental specification** | | |
| Working temperature | 0 ～50°C | |
| Working humidity | 10～90%RH (Non-condensing) | |
| Storage temperature | -20～60°C | |
| Storage humidity | 10～90%RH (Non-condensing) | |
| Sine vibration test | 10 ～500Hz,30m/s$^2$, X,Y,Z direction/hour | |
| Cooling mode | Natural air cooling | |
| **Product certification** | | |
| Panel protection grade | Conforming to IP65 requirements | |
| CE certificate | CE Compliant(EN61000-6-4：2007+A1:2011, EN61000-6-2：2005) | |
| UL certificate | None | UL Compliant |
| **Software** | | |
| Configuration software | Kinco DToolsPro | |

**Mechanical Dimensions (Unit: mm)**

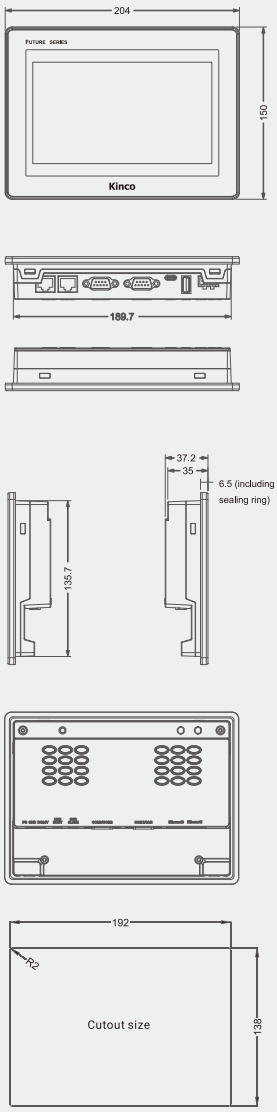

## FUTURE Series Second-generation

# F2100E2/F2100E2(UL)




- 10.1", near-full-view HD display, 16.00M true color
- Designed with dual Ethernet ports and dual serial ports, achieve worry-free communication
- Quad-core high performance, large storage: 1GB RAM + 8GB NAND flash memory
- Built-in isolated power supply to prevent external interference and enhance reliability
- Natural and smooth lines, simple and graceful as a whole
- With the latest configuration software Kinco DToolsPro

| Model/Specification | F2100E2 | F2100E2(UL) |
|---|---|---|
| **Performance specifications** | | |
| Display size | 10.1" TFT | |
| Display area | 222.72 (W) ×125.28 (H) | |
| Resolution | 1024*600 pixel | |
| Display color | 16.77 million true color | |
| Display angle of view | 70/70/60/60(left/right/up/down) | |
| Contrast ratio | 500:1 | |
| Backlight | LED | |
| Brightness | 350cd/m$^2$ | |
| Backlight life | 30000 hours | |
| Touch Panel | 4 line precision resistance network (surface hardness 4H) | |
| CPU | Quad-core ARM 1.8GHz | |
| Memory | 8GB flash memory + 1GB memory | |
| RTC | Built-in RTC + 512KB recipe | |
| Extensible memory | 1 USB Host | |
| Print port | USB Host/Serial port | |
| Ethernet | LAN0:10/100/1000Mbps；LAN1:10/100Mbps | |
| Program download | USB slave/U disk/Ethernet | |
| Communication port | COM0:RS232/RS485/RS422; COM2:RS232 | |
| **Electrical specifications** | | |
| Input power supply | DC10.8V～DC28V,built-in isolated | |
| Rated power | 7W@DC 24V | |
| Allowable loss of power | <3ms | |
| Insulation resistance | Over 50MΩ@500V DC | |
| Pressure resistance test | 500V AC 1 minute | |
| **Structure specifications** | | |
| PCB coating | Yes | |
| Shell material | Engineering plastic | |
| Shape size | 271×213×38mm | |
| Cut-out size | 260×202mm | |
| Weight | 1.1kg | |
| **Environmental specification** | | |
| Working temperature | 0～50°C | |
| Working humidity | 10～90%RH (Non-condensing) | |
| Storage temperature | -20～60°C | |
| Storage humidity | 10～90%RH (Non-condensing) | |
| Sine vibration test | 10～500Hz,30m/s$^2$, X,Y,Z direction/hour | |
| Cooling mode | Natural air cooling | |
| **Product certification** | | |
| Panel protection grade | Conforming to IP65 requirements | |
| CE certificate | CE Compliant(EN61000-6-4:2007+A1:2011, EN61000-6-2:2005) | |
| UL certificate | None | UL Compliant |
| **Software** | | |
| Configuration software | Kinco DToolsPro | |

**Mechanical Dimensions (Unit: mm)**

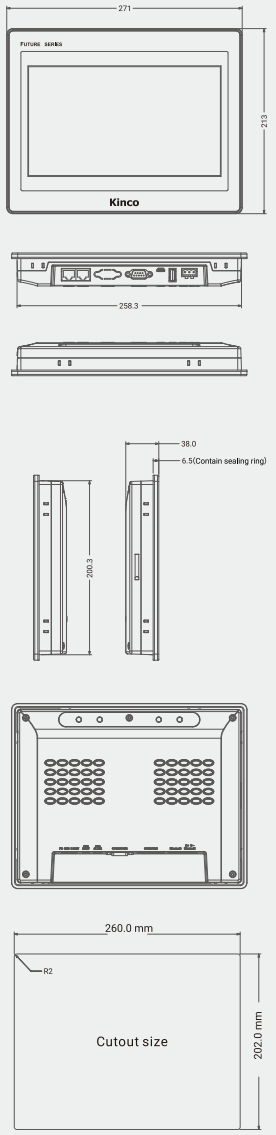




ECFA SRL - Av. San Juan 4063 (1233) - Buenos Aires - Argentina - Tel: +54 11 4923-6566 - email: ventas@ecfa.com.ar - www.ecfa.com.ar

## FUTURE Series Second-generation

# F2121E2/F2121E2(UL)




- 12.1", HD display, 16.00M true color
- Designed with dual Ethernet ports and dual serial ports design, achieve worry-free communication
- Quad-core CPU + 1GB memory + 8GB flash memory, extreme performance
- Metallic shell + three-proofing coating + power isolation, safe and reliable
- With the latest configuration software Kinco DToolsPro

| Model/Specification | F2121E2 | F2121E2(UL) |
|---|---|---|
| **Performance specifications** | | |
| Display size | 12.1″ TFT | |
| Display area | 261.12 (W) ×163.2 (H) | |
| Resolution | 1280*800 pixel | |
| Display color | 16.77 million true color | |
| Display angle of view | 85/85/85/85(left/right/up/down) | |
| Contrast ratio | 1200:1 | |
| Backlight | LED | |
| Brightness | 500cd/$m^2$ | |
| Backlight life | 50000 hours | |
| Touch Panel | 4 line precision resistance network (surface hardness 4H) | |
| CPU | Quad-core ARM 1.8GHz | |
| Memory | 8GB flash memory + 1GB memory | |
| RTC | Built-in RTC + 512KB recipe | |
| Extensible memory | 1 USB Host | |
| Print port | USB Host/Serial port | |
| Ethernet | LAN0:10/100/1000Mbps；LAN1:10/100Mbps | |
| Program download | USB slave/U disk/Ethernet | |
| Communication port | COM0:RS232/RS485/RS422; COM2:RS232 | |
| **Electrical specifications** | | |
| Input power supply | DC18V ～DC28V,built-in isolated | |
| Rated power | 15W@DC 24V | |
| Allowable loss of power | <3ms | |
| Insulation resistance | Over 50MΩ@500V DC | |
| Pressure resistance test | 500V AC 1 minute | |
| **Structure specifications** | | |
| PCB coating | Yes | |
| Shell material | Metallic | |
| Shape size | 313×235×48.5mm | |
| Cut-out size | 295×217mm | |
| Weight | 5kg | |
| **Environmental specification** | | |
| Working temperature | 0 ～50°C | |
| Working humidity | 10～90%RH (Non-condensing) | |
| Storage temperature | -20～60°C | |
| Storage humidity | 10～90%RH (Non-condensing) | |
| Sine vibration test | 10 ～500Hz,30$m/s^2$, X,Y,Z direction/hour | |
| Cooling mode | Natural air cooling | |
| **Product certification** | | |
| Panel protection grade | Conforming to IP65 requirements | |
| CE certificate | CE Compliant(EN61000-6-4：2007+A1:2011, EN61000-6-2：2005) | |
| UL certificate | None | UL Compliant |
| **Software** | | |
| Configuration software | Kinco DToolsPro | |

**Mechanical Dimensions (Unit: mm)**

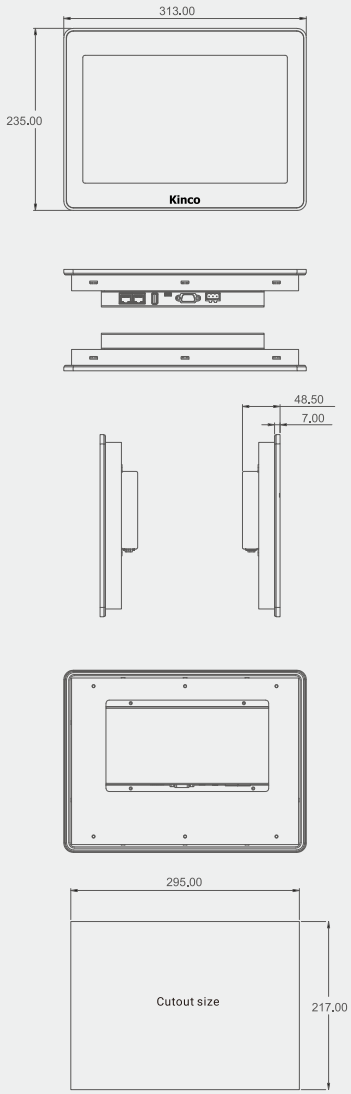




ECFA SRL - Av. San Juan 4063 (1233) - Buenos Aires - Argentina - Tel: +54 11 4923-6566 - email: ventas@ecfa.com.ar - www.ecfa.com.ar

## FUTURE Series Second-generation

# F2150E2




- 15", 1,024*768 resolution, 16.00M true color
- 88/88/88/88 near-full-view display
- Quad-core high performance CPU + 1G memory + 8G storage
- Designed with dual Ethernet ports, able to be connected to more peripherals
- Isolated power supply+ PCB three-proofing, being able to be used in multiple severe environments
- With the latest configuration software Kinco DtoolsPro

| Model/Specification | F2150E2 |
|---|---|
| **Performance specifications** | |
| Display size | 15"TFT |
| Display area | 304.1(H)X228.1(V) |
| Resolution | 1,024*768 pixels |
| Display color | 16.77M true color |
| Display angle of view | 88/88/88/88 (left/right/up/down) |
| Contrast ratio | 2500:1 |
| Backlight | LED |
| Brightness | 350cd/$m^2$ |
| Backlight life | 70,000 hours |
| Touch panel | 4-wire precision resistance network |
| Processor | Quad-core ARM 1.8GHz |
| Storage | 8GB eMMC flash memory + 1GB RAM |
| RTC | Built-in RTC + 512KB recipe |
| Expandable storage | 1 USB HostUSB host/serial port |
| Print port | LAN0:10/100/1000 Mbps LAN1:10/100 Mbps |
| Ethernet | IEEE802.11 b/g/nAP |
| Program download | Ethernet port/USB Slave/U disk |
| Communication port | COM0:RS232/RS485/RS422;COM1:RS485/RS422;COM2:RS232; |
| **Electrical specifications** | |
| Input power supply | DC18V~DC28V built-in isolated power supply |
| Power consumption | 15W@DC24V |
| Insulation resistance | Over 50MΩ@500V DC |
| Hi-pot test | 500 VAC 1 minute |
| **Structure specifications** | |
| PCB coating (Yes/No) | Yes |
| Shell material | Metallic |
| Shape size | 366*293*49.5mm |
| Cutout size | 352*279mm |
| Weight | 5kg |
| **Environmental specifications** | |
| Operating ambient temperature | 0~50°C |
| Operating ambient humidity | 10~90% RH (noncondensing) |
| Storage ambient temperature | -20~60°C |
| Storage ambient humidity | 10~90% RH (noncondensing) |
| Shockproof performance | 10~500Hz, 30m/$S^2$, X, Y, Z directions/hour |
| Cooling mode | Natural air cooling |
| **Product certification** | |
| Panel protection grade | IP65 compliant (4208-93) |
| CE authentication | CE compliant (EN IEC 61000-6-4:2019, EN IEC 61000-6-2:2019) |
| **Software** | |
| Configuration software | Kinco DToolsPro |

**Mechanical Dimensions (Unit: mm)**

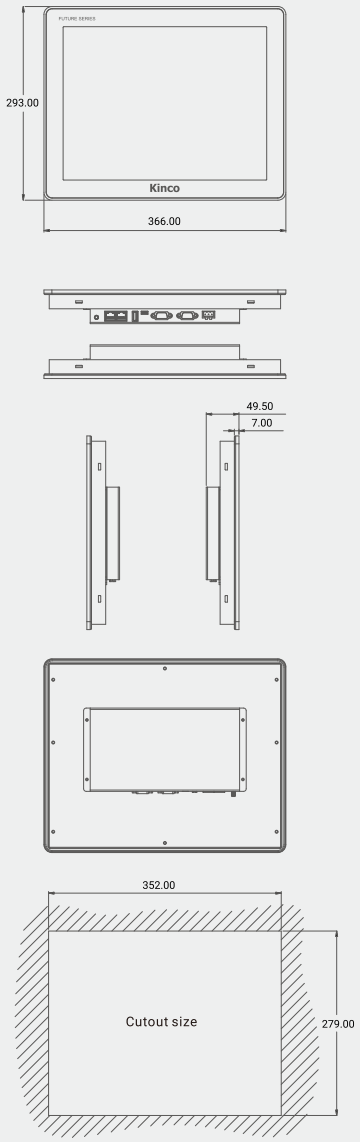

## FUTURE Series Second-generation

# F2156E2/F2156E2(UL)



- 15.6" resistive screen, 1920*1080 pixels, 16.00M true color
- Designed with dual Ethernet ports and dual serial ports design, achieve worry-free communication
- Quad-core CPU + 1GB memory + 8GB flash memory, extreme performance
- Metallic shell + three-proofing coating + power isolation, safe and reliable
- With the latest configuration software Kinco DtoolsPro

| Model/Specification | F2156E2 | F2156E2(UL) |
|---|---|---|
| Performance specifications | | |
| Display size | 15.6″ TFT | |
| Display area | 344.16 (W) ×163.2 (H) | |
| Resolution | 1920*1080 pixel | |
| Display color | 16.2 million true color | |
| Display angle of view | 89/89/89/89(left/right/up/down) | |
| Contrast ratio | 1000:1 | |
| Backlight | LED | |
| Brightness | 300cd/m$^2$ | |
| Backlight life | 30000 hours | |
| Touch Panel | 4 line precision resistance network (surface hardness 4H) | |
| CPU | Quad-core ARM 1.8GHz | |
| Memory | 8GB flash memory + 1GB memory | |
| RTC | Built-in RTC + 512KB recipe | |
| Extensible memory | 1 USB Host | |
| Print port | USB Host/Serial port | |
| Ethernet | LAN0:10/100/1000Mbps；LAN1:10/100Mbps | |
| Program download | USB slave/U disk/Ethernet | |
| Communication port | COM0:RS232/RS485/RS422; COM2:RS232 | |
| Electrical specifications | | |
| Input power supply | DC18V ～DC28V,built-in isolated | |
| Rated power | 15W@DC 24V | |
| Allowable loss of power | <3ms | |
| Insulation resistance | Over 50MΩ@500V DC | |
| Pressure resistance test | 500V AC 1 minute | |
| Structure specifications | | |
| PCB coating | Yes | |
| Shell material | Metallic | |
| Shape size | 395×259×25.5mm | |
| Cut-out size | 381.5×245.5mm | |
| Installation | Buckle mounting, and VESA rack mounting (VESA 100 *100 mm) | |
| Weight | 2.5kg | |
| Environmental specification | | |
| Working temperature | 0 ～50°C | |
| Working humidity | 10～90%RH (Non-condensing) | |
| Storage temperature | -20～60°C | |
| Storage humidity | 10～90%RH (Non-condensing) | |
| Sine vibration test | 10 ～500Hz,30m/s$^2$, X,Y,Z direction/hour | |
| Cooling mode | Natural air cooling | |
| Product certification | | |
| Panel protection grade | Conforming to IP65 requirements | |
| CE certificate | CE Compliant(EN61000-6-4：2007+A1:2011, EN61000-6-2：2005) | |
| UL certificate | None | UL Compliant |
| Software | | |
| Configuration software | Kinco DToolsPro | |

Mechanical Dimensions (Unit: mm)

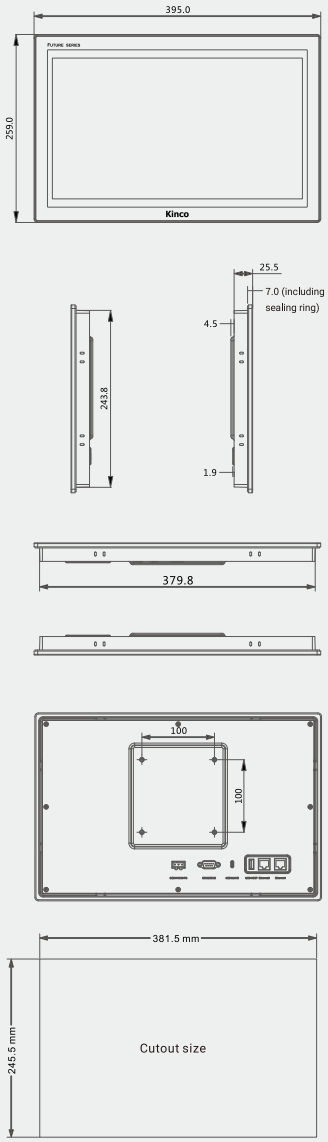




ECFA SRL - Av. San Juan 4063 (1233) - Buenos Aires - Argentina - Tel: +54 11 4923-6566 - email: ventas@ecfa.com.ar - www.ecfa.com.ar

## FUTURE Series Second-generation

# F2156E2-PX/F2156E2-PX(UL)




- 15.6" resistive screen, 1920*1080 pixels, 16.00M true color
- Designed with dual Ethernet ports and dual serial ports design, achieve worry-free communication
- Quad-core CPU + 1GB memory + 8GB flash memory, extreme performance
- Metallic shell + three-proofing coating + power isolation, safe and reliable
- With the latest configuration software Kinco DtoolsPro

| Model/Specification | F2156E2-PX | F2156E2-PX(UL) |
|---|---|---|
| **Performance specifications** | | |
| Display size | 15.6″ TFT | |
| Display area | 344.16 (W) ×163.2 (H) | |
| Resolution | 1920*1080 pixel | |
| Display color | 16.2 million true color | |
| Display angle of view | 89/89/89/89(left/right/up/down) | |
| Contrast ratio | 1000:1 | |
| Backlight | LED | |
| Brightness | 300cd/m$^2$ | |
| Backlight life | 30000 hours | |
| Touch Panel | Reinforced glass capacitive touch panel | |
| CPU | Quad-core ARM 1.8GHz | |
| Memory | 8GB flash memory + 1GB memory | |
| RTC | Built-in RTC + 512KB recipe | |
| Extensible memory | 1 USB Host | |
| Print port | USB Host/Serial port | |
| Ethernet | LAN0:10/100/1000Mbps；LAN1:10/100Mbps | |
| Program download | USB slave/U disk/Ethernet | |
| Communication port | COM0:RS232/RS485/RS422; COM2:RS232 | |
| **Electrical specifications** | | |
| Input power supply | DC18V～DC28V,built-in isolated | |
| Rated power | 15W@DC 24V | |
| Allowable loss of power | <3ms | |
| Insulation resistance | Over 50MΩ@500V DC | |
| Pressure resistance test | 500V AC 1 minute | |
| **Structure specifications** | | |
| PCB coating | Yes | |
| Shell material | Metallic | |
| Shape size | 395×259×25.5mm | |
| Cut-out size | 381.5×245.5mm | |
| Installation | Buckle mounting, and VESA rack mounting (VESA 100 *100 mm) | |
| Weight | 2.5kg | |
| **Environmental specification** | | |
| Working temperature | 0～50°C | |
| Working humidity | 10～90%RH (Non-condensing) | |
| Storage temperature | -20～60°C | |
| Storage humidity | 10～90%RH (Non-condensing) | |
| Sine vibration test | 10～500Hz,30m/s$^2$, X,Y,Z direction/hour | |
| Cooling mode | Natural air cooling | |
| **Product certification** | | |
| Panel protection grade | Conforming to IP65 requirements | |
| CE certificate | CE Compliant(EN61000-6-4：2007+A1:2011, EN61000-6-2：2005) | |
| UL certificate | None | UL Compliant |
| **Software** | | |
| Configuration software | Kinco DToolsPro | |

**Mechanical Dimensions (Unit: mm)**

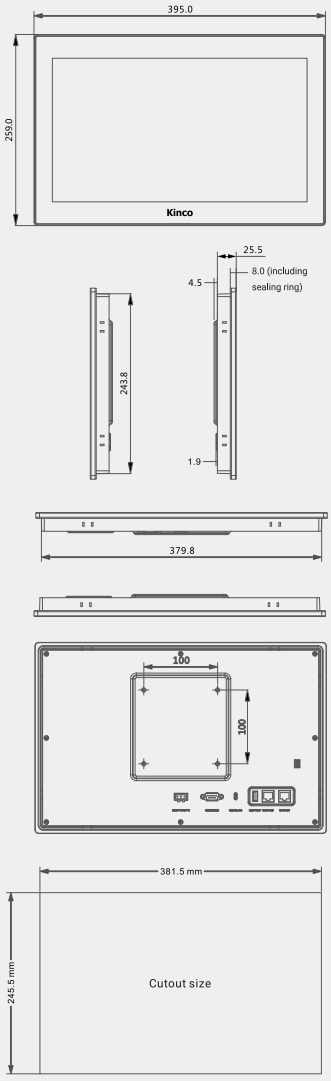

## FUTURE Series Second-generation

# F2156E-TX



- 15.6" capactive,1920*1800 pixel,16 million true color
- Dual Ethernet ports and dual serial ports design,flexible communication
- Quad-core CPU + 1GB RAM + 8GB flash storage, ultimate performance
- Integrated appearance design of the whole machine, used in combination with buttons and emergency stop switches
- Cantilever installation provides a large operation space, high flexibility and strong adaptability
- Metal casing + PCB protection + power isolation,safe and reliable

| Model/Specification | F2156E-TX |
|---|---|
| **Performance specifications** | |
| Display size | 15.6″ TFT |
| Display area | 344.16 (W) ×163.2 (H) |
| Resolution | 1920*1080 pixel |
| Display color | 16.2 million true color |
| Display angle of view | 89/89/89/89(left/right/up/down) |
| Contrast ratio | 1000:1 |
| Backlight | LED |
| Brightness | 300cd/$m^2$ |
| Backlight life | 30000 hours |
| Touch Panel | Reinforced glass capacitive touch panel |
| CPU | Quad-core ARM 1.8GHz |
| Memory | 8GB flash memory + 1GB memory |
| RTC | Built-in RTC + 512KB recipe |
| Extensible memory | 1 USB Host |
| Ethernet | LAN0:10/100/1000Mbps |
| Emergency stop switch | 1*Dual-circuit emergency stop |
| Switch button | 1*Metal button ( green LED ), 1*Metal button ( blue LED ), 1*Metal button ( red LED ) |
| Program download | USB slave/U disk/Ethernet |
| Communication port | COM0:RS232/RS485/RS422; COM2:RS232 |
| **Electrical specifications** | |
| Input power supply | DC18V ～DC28V,built-in isolated |
| Rated power | 15W@DC 24V |
| Allowable loss of power | <3ms |
| Insulation resistance | Over 50MΩ@500V DC |
| Pressure resistance test | 500V AC 1 minute |
| **Structure specifications** | |
| PCB coating | Yes |
| Shell material | Metallic |
| Shape size | 397×297×46mm |
| Installation | Cantilever installation |
| Installation size | 118×70mm |
| Weight | 4kg |
| **Environmental specification** | |
| Working temperature | 0 ～50°C |
| Working humidity | 10～90%RH (Non-condensing) |
| Storage temperature | -20～60°C |
| Storage humidity | 10～90%RH (Non-condensing) |
| Sine vibration test | 10 ～500Hz,30m/$s^2$, X,Y,Z direction/hour |
| Cooling mode | Natural air cooling |
| **Product certification** | |
| Panel protection grade | Conforming to IP65 requirements |
| CE certificate | CE Compliant(EN61000-6-4：2007+A1:2011, EN61000-6-2：2005) |
| **Software** | |
| Configuration software | Kinco DToolsPro |

**Mechanical Dimensions (Unit: mm)**

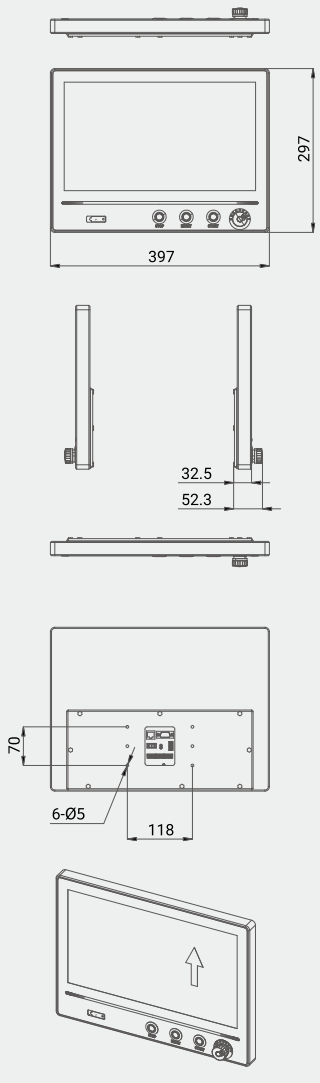

# R321KB Series Desktop High-frequency Reader-writer




- Support USB port communication
- Built-in high frequency antenna
- Support ISO/IEC 14443A/B, ISO/IEC 15693 and ISO1 8000-3M1
- The effective reading/writing distance is up to 5cm (Source: Mifare1 S50 card in the environments free from other disturbances at room temperature)
- Built-in LED indicator and buzzer

| Model | RFID-R321KB-PB |
|---|---|
| Parameters | |
| Operating voltage/power consumption | +5V/0.3W |
| Communication port | USB |
| Port type | USB Type A |
| Operating frequency | 13.56MHz |
| Antenna pattern | Integrated |
| TX power | 0.2W |
| Supported protocols | ISO14443A/B,ISO15693/ISO18000-3M1 |
| Tag reading distance | 5cm |
| Operating temperature | -10°C～+65°C |
| Dimensions | 122×73×15mm |
| Material | ABS |

Mechanical Dimensions (Unit: mm)

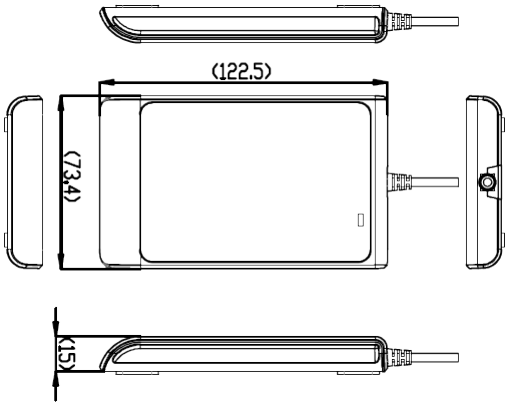


| SN | Port type | Pin definition | 功能说明 |
|---|---|---|---|
| CON1 | USB Type A male connector | PIN1 | +5V |
| | | PIN2 | D- |
| | | PIN3 | D+ |
| | | PIN4 | GND |
| LED | LED indicator | Steady green light | The device is operating normally |
| | | Flashing green light | Electronic tag reading succeeded |
| ANT | Antenna | / | Card reading area of reader |




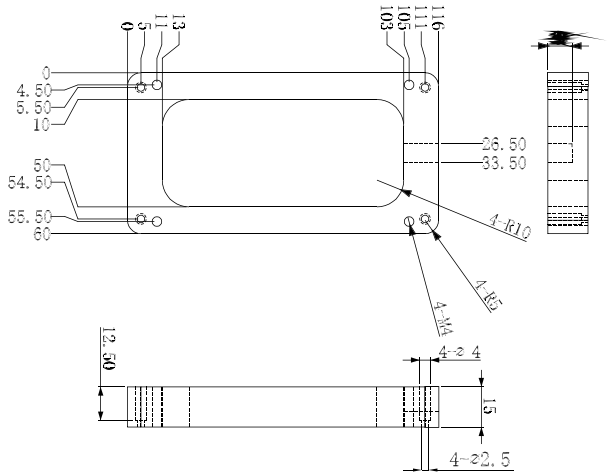

# Features of Kinco DToolsPro (configuration software)

## A new generation of Kinco configuration software:

# Kinco DToolsPro

Office software style, modern, minimalist, and elegant.
The object-oriented development enables it to give quick response for maintenance and upgrade
The tag-variable configuration mode makes it close to the ST language programming habits
Integrated button, multiple copy, batch modification and other convenient operations boost efficient configuration



### Operation log
Support table layout import and export as well as fast configuration

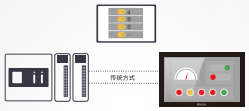

### Tag communication
OMRON, Siemens, Bottu, codesys, etc.

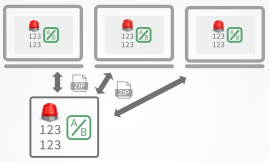

### Template library
With custom grouped controls, support import and export




### RFID
USB driver-free, card-swiping login checked by one click

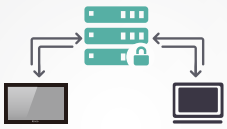

### Database
Built-in SQLite for supporting access My SQL. SQL Server. Postgresql

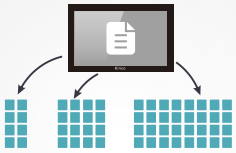

### I/O
Support 8/16/32 bits data, and import or export configurations through descriptions



### E-signature
Double confirmation by operator and proofer, perfect tracking of historical logs



### Macros
Function template insertion, variable search and substitution, separate compilation



### Dynamic alarms
Support deviation, multi-range and expression alarms as well as history enquiry

# Notas

# Notas

## PROVEN PERFORMANCE

Customers in over 60 countries and in diverse markets and sectors.




**Importa y distribuye en Argentina:**

**ECFA S.R.L.**

Av. San Juan 4063 (C1233ABK) - Buenos Aires - Argentina

+54 11 4923-6566

ventas@ecfa.com.ar

https://www.ecfa.com.ar

**Kinco® Automation**

**www.en.kinco.cn** Email:sales@kinco.cn

(All trademarks and logos in this brochure are property of and registered by their respective owners.)

DToolsPro-202511